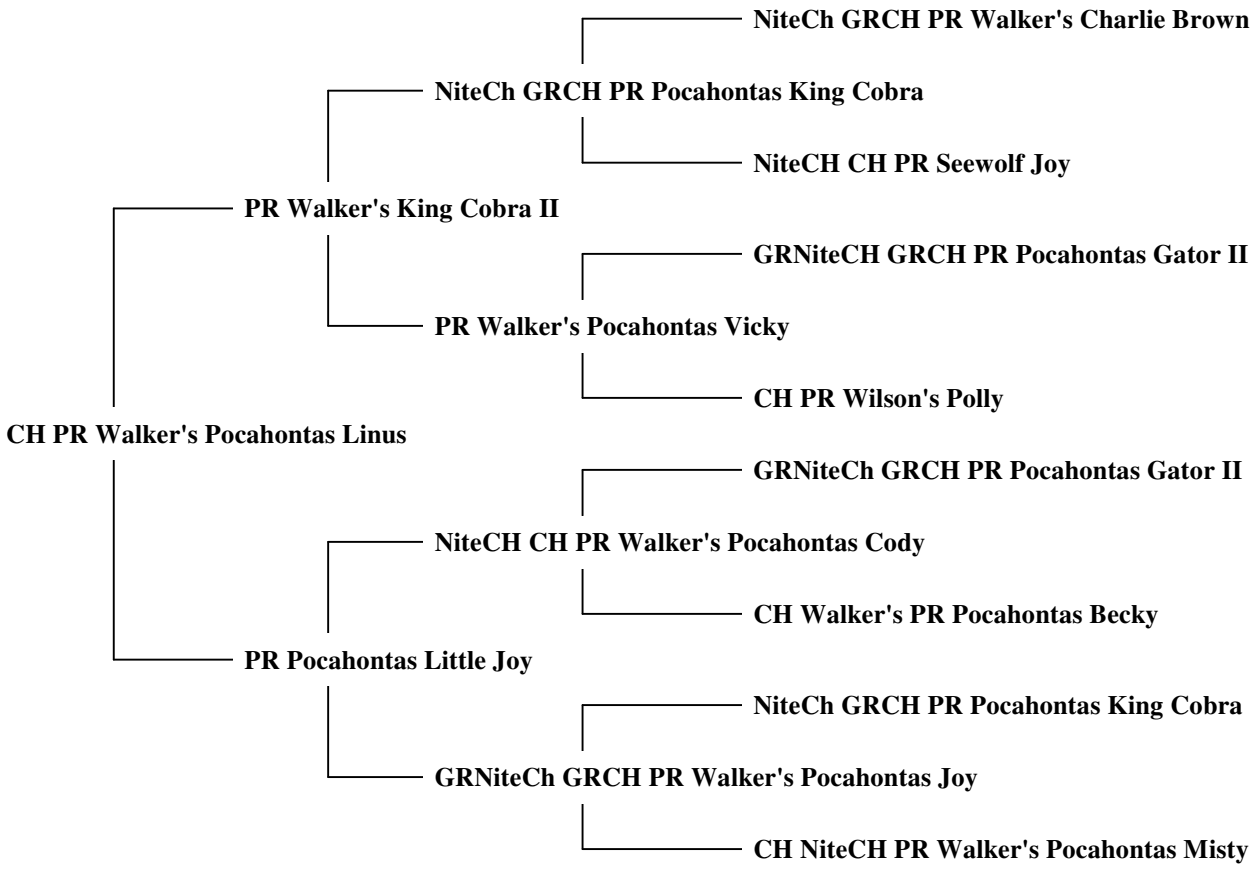Pedigree of CH Walker's Pocahontas Linus